LTR	ZONE	REVISION	DATE	APPROVAL

RELEASED
Date Rev Init
2.20.97 NC

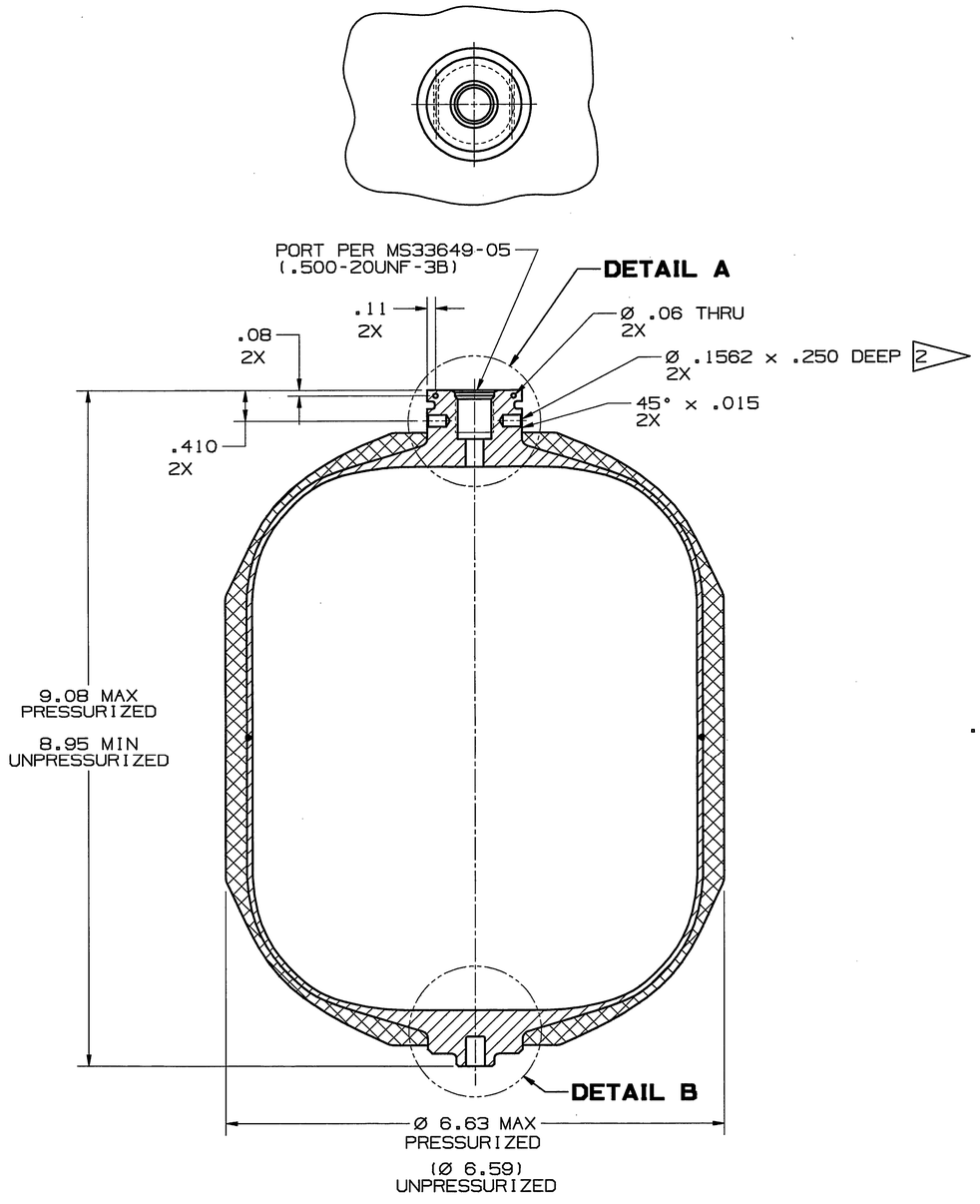

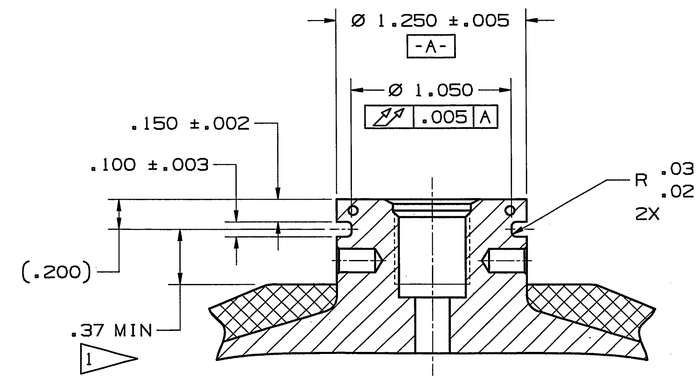

DETAIL A
SCALE: 2/1
TANK BOSS

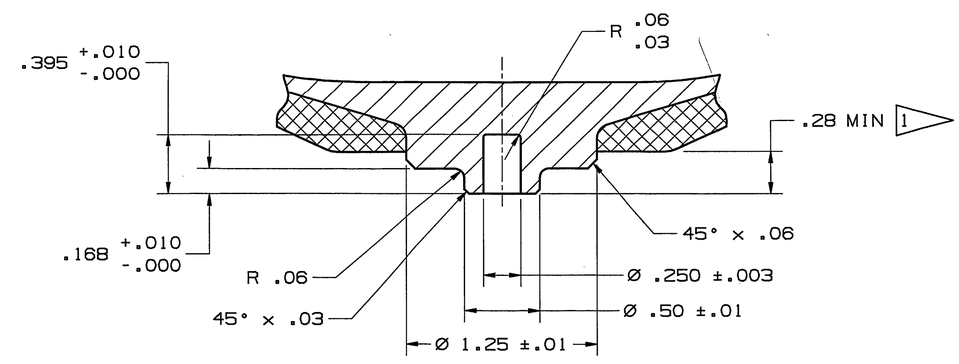

DETAIL B
SCALE: 2/1
TANK LUG

3 VESSEL PARAMETERS -
MOP: 10,000 psig @ 200° F
PROOF: 15,000 psig MINIMUM
BURST: 20,000 psig MINIMUM
CYCLE: 100 TO MOP MINIMUM

2 VENDOR P/N: D4616

1 VENDOR: ARDE, INC.
500 WALNUT STREET
NORWOOD, N.J. 07648
(201) 784-9880

NOTES: UNLESS OTHERWISE SPECIFIED

2 HOLES ARE TO BE USED WITH SPANNER WRENCH SUPPLIED BY VENDOR.

1 DIMENSIONS APPLY TO BOTH PRESSURIZED AND UNPRESSURIZED TANKS.

FLAG NOTES:

- SPECIFICATION CONTROL DRAWING -

DIMENSIONAL TOLERANCE UNLESS OTHERWISE NOTED
.0 ± .1 .000 ± .005
.00 ± .01 ANGULAR ± .5°

SURFACE FINISH IN MICROINCHES RMS UNLESS NOTED OTHERWISE 125

NEXT ASSY
SED33105904

EQUIPMENT TYPE
☒ FLT HDWR ☐ OTHER (SPECIFY)
☐ GSE WITH I/F TO FLT HDWR

SIGNATURES		DATE
DR	P. MOTT	96-09-11
ENG		96-11-26
CH	Chuck Gray	96-11-21
STR	L. H. Lewis	97-02-13
MAT'L	C. W. Chang	97-2-13
APP		2/18/97
QE		2/18/97
AUTH		2/18/97

☒ FRACTURE CRITICAL
☐ NON-FRACTURE CRITICAL

NATIONAL AERONAUTICS & SPACE ADMINISTRATION
LYNDON B. JOHNSON SPACE CENTER HOUSTON, TEXAS

TANK, GN2

CODE IDENT NO.	SIZE	DWG NO.	REV
21356	D	SLD33105971	-
SCALE 1/1		AUTO & ROBOTICS DIV.	SHEET 1 OF 1

SAFER